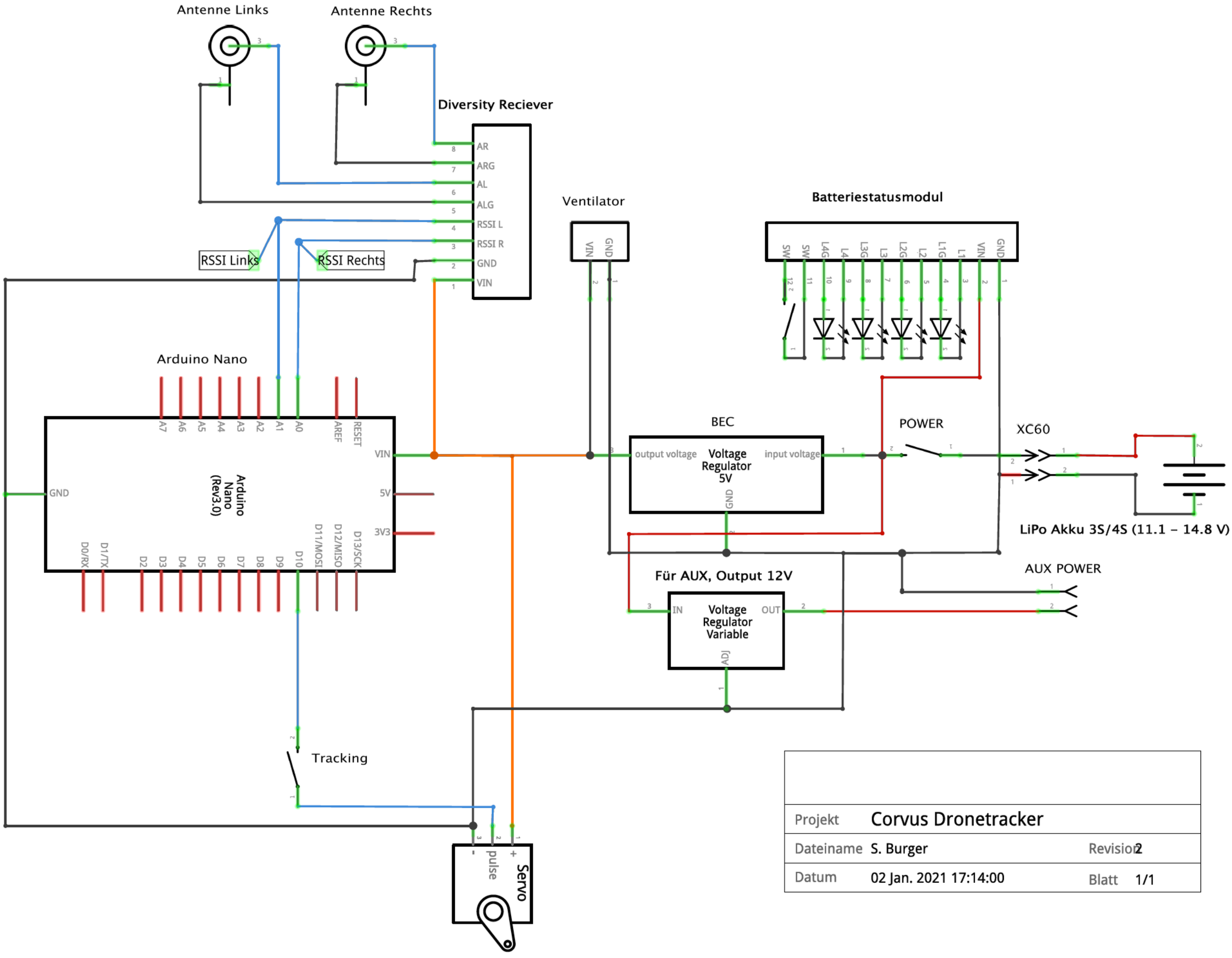
Antenne Links
Antenne Rechts
Diversity Reciever
AR
ARG
AL
ALG
RSSI L
RSSI R
GND
VIN
RSSI Links
RSSI Rechts
Ventilator
VIN
GND
Batteriestatusmodul
SW
SW
L4G
L4
L3G
L3
L2G
L2
L1G
L1
VIN
GND
Arduino Nano
A7
A6
A5
A4
A3
A2
A1
A0
AREF
RESET
VIN
5V
3V3
GND
Arduino Nano (Rev3.0)
D0/RX
D1/TX
D2
D3
D4
D5
D6
D7
D8
D9
D10
D11/MOSI
D12/MISO
D13/SCK
BEC
output voltage
Voltage Regulator 5V
input voltage
GND
POWER
XC60
LiPo Akku 3S/4S (11.1 – 14.8 V)
AUX POWER
Für AUX, Output 12V
IN
Voltage Regulator Variable
OUT
ADJ
Tracking
Servo
pulse
-
+
Projekt
Corvus Dronetracker
Dateiname
S. Burger
Revision
2
Datum
02 Jan. 2021 17:14:00
Blatt
1/1